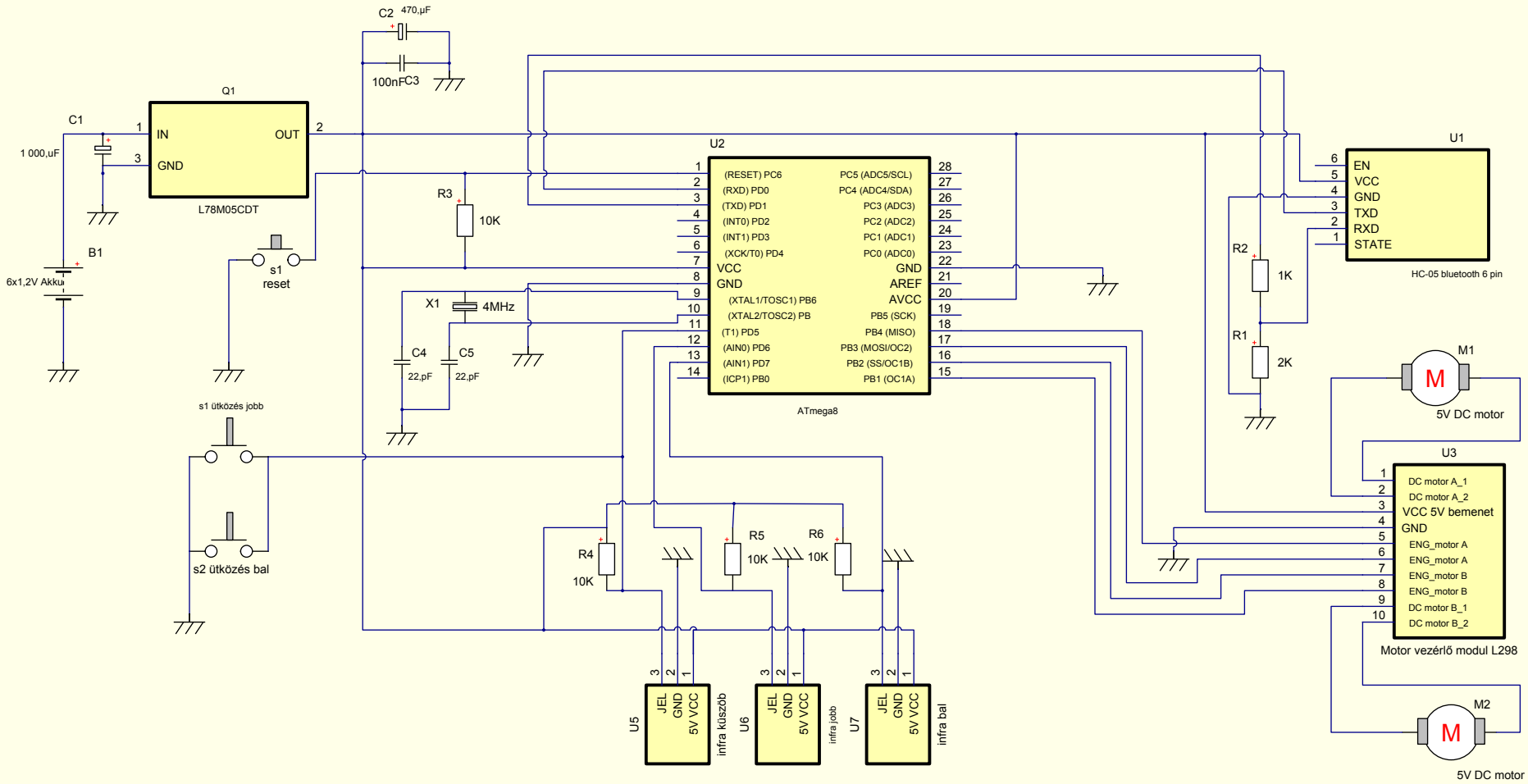

Title:		
Description		
Designed by:	2018. január 18. - 23:00	
Checked by:	Doc. No:	Revision: 1:22
Approved by:	Sheet: Schematic	Size: A